Accessories – GT Products 3 3/8" Mullions

Series: Accessories Manufacturing Code: GT04

Drawing 1/2 Scale – For Custom Size Drawing Contact Graham

Note: Sealant Not Shown On Details. Refer To General Installation Instructions.

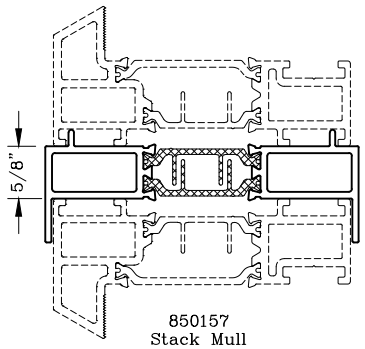

850157
Stack Mull

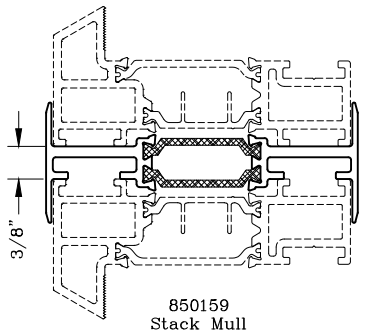

850159
Stack Mull

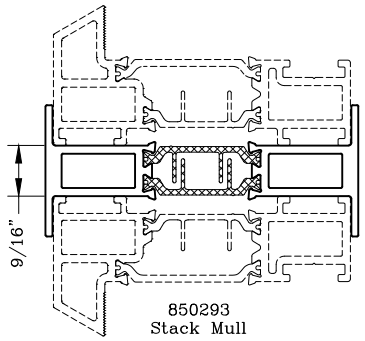

850293
Stack Mull

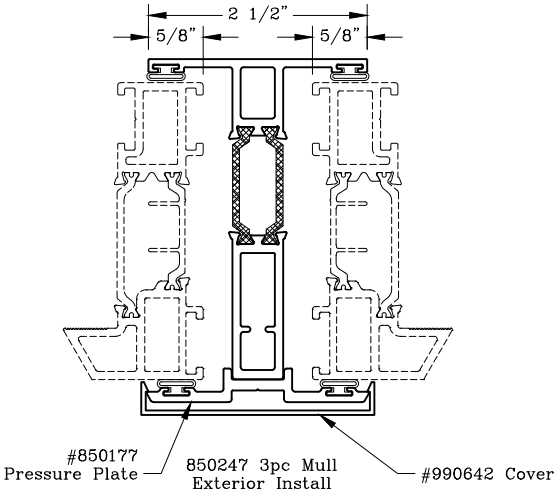

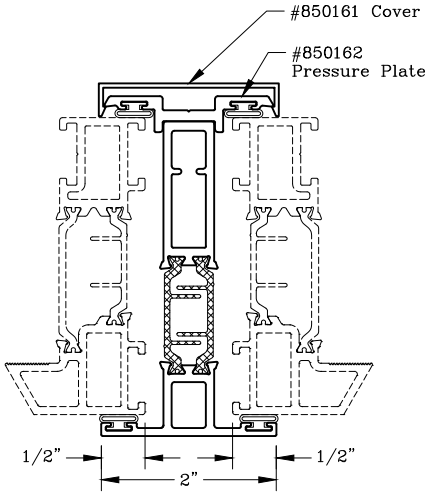

850160 3pc Mull

Graham Architectural Products reserves the right to change, add, cancel, remove or otherwise modify the details illustrated without prior notice.

1551 Mt. Rose Avenue, York, Pennsylvania 17403-2909 717.849.8100 Toll Free: 800/755-6274
Web Site: www.grahamwindows.com